L22DC

Proponente:
INFRASTRUCTURE
ITALIA LAND 2 S.r.l.
Via del Bosco Rinnovato, 6
20057 – Assago (MI), Italia

Progetto Nuovo Data Center Campus Siziano

VALUTAZIONE IMPATTO AMBIENTALE
ai sensi del Titolo III del d.lgs. 152/2006

PUE MIL08B

Documento:
4553-L22-ZZ-ZZZ-TRP-EL-0038

Data
30 giugno 2026

Revisione
V.00

CUSTOMER | GENERAL CONTRACTOR | DESIGN AND MANAGEMENT TEAM

STACK INFRASTRUCTURE
DATA CENTER MIL08B

Via Marche 8

RIBA 4

Power Usage effectiveness
Technical Note

Milan, 27/06/2025

Summary

GENERAL INFORMATION 3
ACRONISM AND ABBREVIATION 3
INTRODUCTION 4
SITE DESCRIPTION AND LOCATION 4
WEATHER DATA 6
BASIS OF DESIGN 6
DATA HALL INTERNAL ENVIROMENTAL CONDITIONS 7
COOLING TECHNOLGIES 7
PUE ANALISYS 8
DETAILED PUE ANALYSIS 10
ANNUAL HOURLY DATA ON HEAT REJECTION PLANT 11
DETAILED PUE PEAK CALCULAITON 14
PHOTOVOLTAIC GAIN 16
CONCLUSION 17
APPENDIX A ASHRAE WEATHER DATA 18
APPENDIX B MECHANICAL SCHEMATICS 19
APPENDIX C TYPICAL METERING SCHEMATICS 20

GENERAL INFORMATION

MIL08B is a new data centre, located in Siziano municipality, South west of Milan, Italy.

The site consist essentialy:
- Main building
- MV substation

The Main building, divided in 4 functional areas, consist on:
- admin block
- technical space
- external mep yard
- Two data hall

Each data hall IT load reach 2,5 MW.
IRR engineering has been appointed to evaluate the design power usage effectivenes (dPUE) for MIL08B in accordance with EN50600-4 and ISO/IEC 30134-2:2016/AMD 1:2018
Target dPUE is set to be lower or equal to 1.4.
This techincal report demonstrates how the annualised PUE has been derivated for the site and outlines the basis for calculation.

dPUE design has been done in according to ISO IEC 30134
Calculation has been done considering the following passages:
1. definition of all the individual energy power consumption of the mechanical equipment, according to the data sheet.
2. definition of all the electrical losses due to the main electrical equipment adding also additional electrical consumption (lighting, others).
3. dPUE is calculated considering the behavior of the free cooling chiller according to the external condition. Reference data is provided by the chiller manufacturer.
4. an annual recap is also developed.

Photovoltaic (PV) has not be considered inside the main calculation following the reason to not alterate the PUE calculation with the potential positive impact in terms of gains. This report provides, separately the PUE calculation considering the PV gains.

The PUE analysis conducted shows that the predicted annualized dPUEat 100% IT load utilization is 1.34 based on asharae weather data.
Must be considered that is rare for data center to operate at the full load so a more realistic scenario expected consider a PUE of 1.33.

ACRONISM AND ABBREVIATION

Abbreviation	Meaning
ACC	Air-cooled chiller
AHU	Air handling unit
ASHRAE	American Society of Heating, Refrigerating and Air-Conditioning Engineers
CFD	Computational fluid dynamics
CHW	Chilled water
CRAH	Computer room air handling
DB	Dry bulb
DP	Dew point
DX	Direct expansion

Abbreviation	Meaning
EER	Energy efficiency ratio
ERE	Energy reuse effectiveness
EU	European Union
FWU	Fan wall unit
HC	Hybrid cooler
IT	Information technology
IWEC	International weather for energy calculations
LV	Low voltage
MMR	Meet me room
MV	Medium voltage
PDU	Power distribution unit
PUE	Power usage effectiveness
PV	Photovoltaic
STS	Static transfer switch
UPS	Uninterrupted power supply
VRF	Variable refrigerant flow
VSD	Variable speed drive
WB	Wet bulb

Symbol	Meaning
E	Energy consumption

Subscript	Meaning
C	Cooling capacity
DC	Data centre
IT	Information technology
TH	Thermal

INTRODUCTION

There is a heavy focus on energy efficiency in the data center industry and the measure of Power Usage Effectiveness (PUE) is used to evaluate how effectively the power is used in generating IT capacity. PUE is essentially the ratio of the data center total energy consumption to IT equipment energy consumption, calculated and measured across the same period.

As the PUE value is always greater than 1, an efficient annualized value is deemed to be between 1.2 – 1.5 with anything below this range seen as very efficient (see Table 1.1). A recent survey published by the Uptime Institute indicated that the average annualized PUE globally was 1.57, however, it is noted that this figure included many older data centers where it was not possible to overhaul the facility to achieve better efficiencies.

The target designed PUE (dPUE) for MIL08B is to be less than or equal to 1.4. This target indicates highly efficient data center power usage and is in line with the current growing trend of lowering PUEs. To achieve this dPUE, there are many factors that contribute to it such as equipment selections, equipment efficiencies, distribution losses, and one of the key dPUE contributors is the mechanical cooling of IT equipment and the temperatures associated with this cooling. This report aims to describe how the annualized dPUE for MIL04 was calculated in accordance with internationally recognized standards such as the Green Grid, EN 50600-4 and ISO/IEC 30134-2:2016/AMD 1:2018.

SITE DESCRIPTION AND LOCATION

MIL08B is a new data center in Siziano municipality, in the Province of Pavia in the Italian region Lombardia, located about 20 km south west of Milan.

Below a picture of the plot, the new building will have a total covered surface (building plus ancillaries' room) approximately like 4650 sqm.
Total plot surface is approximately 11400sqm.

CUSTOMER | GENERAL CONTRACTOR | DESIGN AND MANAGEMENT TEAM

WEATHER DATA

Weather data has been extracted using Meteonorm TMY2

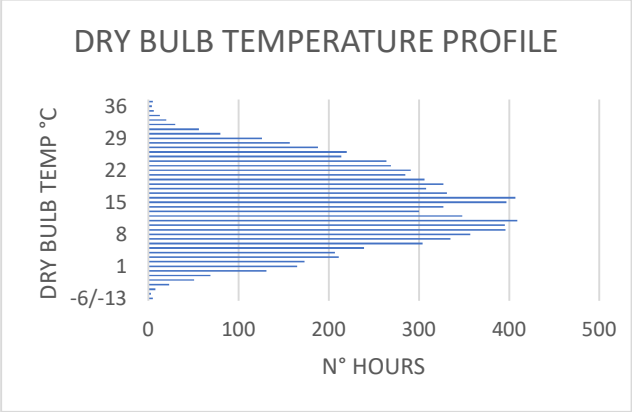

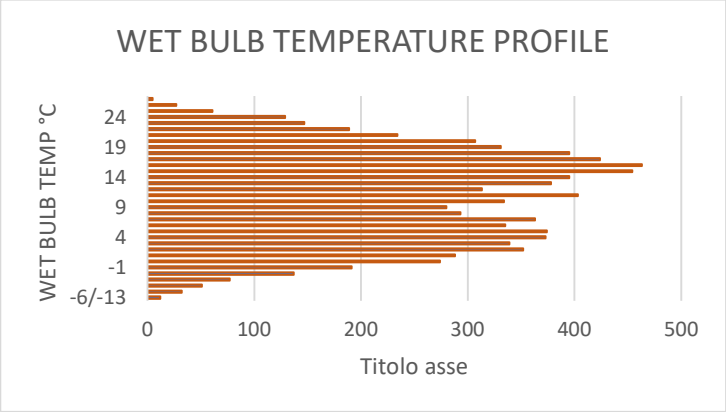

Outdoor design condition are based on ASHRAE 2021 weather data for the location Linate – Milano, Italy. External annual design data of n=50 years will be used for peak load calculation and equipment selection as higlited below

Extreme Annual Design Conditions																
Extreme Annual WS				Extreme Annual Temperature				n-Year Return Period Values of Extreme Temperature								
				Mean		Standard deviation		n=5 years		n=10 years		n=20 years		n=50 years		
1%	2.5%	5%		Min	Max	Min	Max	Min	Max	Min	Max	Min	Max	Min	Max
6.8	5.4	4.4	DB	-6.4	35.5	2.0	1.3	-7.8	36.5	-9.0	37.2	-10.1	37.9	-11.5	38.8
			WB	-7.0	26.1	2.0	1.4	-8.5	27.1	-9.6	28.0	-10.8	28.7	-12.2	29.8

Considering the continuing climate change the design intent includes a 3% more on the external temperature as a catenative factor reaching for hot season a maximum DB temperature of 40°C

BASIS OF DESIGN

PUE analysis has been carried out based on the following key design data

Peak external design condition	Summer Winter	40°c db 30.8°c wb -11,5 db -12.2°c wb

Internal design condition	Data halls/	
	Electrical rooms	
Chilled water system	Inlet flow Return flow	18°c 27°c
Cooling capacity	Total it Total cooling	5mwit 6,79mw
Mechanical redundancy level	Cooling unit Data hall cooling unit	N+1 N+4
Electrical power module	Available nominal power	2500kW
Electrical power usage orninary	Power	1800
Generator	Available nominal power	2100kW
Electrical redundancy level	Pods and gen sets	N+1+c

DATA HALL INTERNAL ENVIROMENTAL CONDITIONS

Internal environment conditions are of importance to IT and electrical hardware and equipment due to its sensitivity to temperature and humidity level can impact the static charge voltage in the air. ASHRAE Thermal Guidelines for Data Processing Environments TC 9.9 has outlined the recommended internal conditions for data center operation to improve the usable life cycle of the equipment and its thermal compatibility and reliability.
The ASHRAE recommended and A1 allowable range are highlighted in the image below. Data center facilities are designed and operated to the target the recommended range during normal operation. During maintenance, failure mode or extreme weather conditions, the data center facilities are permitted to operate in the A1 Allowable range for a limited period.

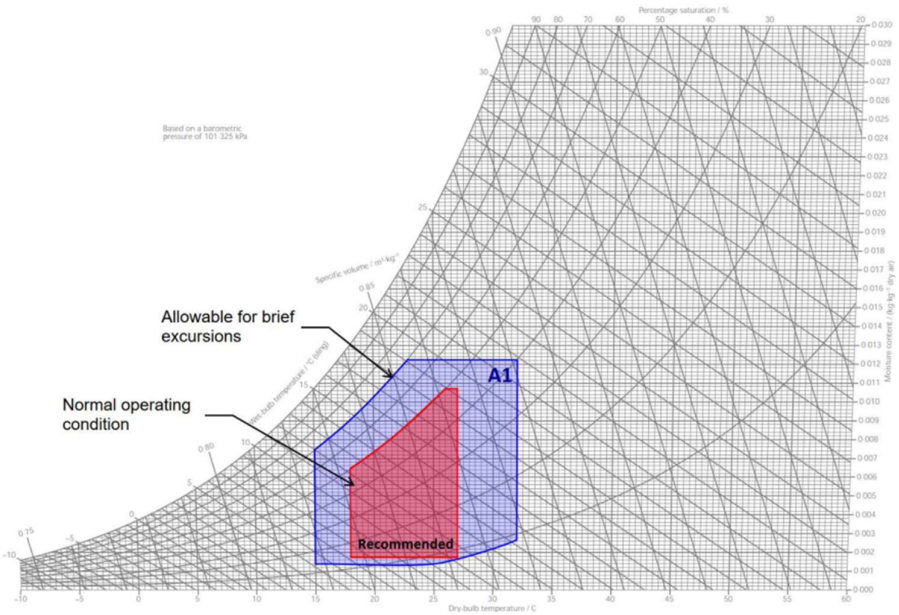

COOLING TECHNOLGIES

The proposed mechanical plan comprises the following main components

Heat rejection system – Air cooled chillers
Primary chilled water pumps (VSD controlled) inside chillers
Fan walls unit for data room cooling
CRAC units for electrical switch rooms
DX unit for network rooms and ancillaries' room

The entire site is designed to deliver a total of 5MWIT and the overall cooling is approximately 6795kW each primary CHW circuit can provide a total of 1359kW dedicated to the data rooms, each switchgear room is equipped with a 2N CRAC/DX system for a global cooling demand of approximately 80kW

PUE ANALISYS

As mentioned, the dPUE calculations have been conducted following the European Standards EN50600-4 and the international standard ISO/IEC 30134-2:2016/AMD 1:2018 and it has been analyzed under various scenario that consider different level of IT utilization such as:

-25 % IT LOAD
-50% IT LOAD
-75% IT LOAD
-100%IT LOAD

The dPUE has been calculated as shown below

$$dPUE = \frac{E_{DC}}{E_{IT}}$$

Where :
E_{DC} : Total data center energy consumption (annual) expressed in kwh
E_{IT} : Total IT energy consumption (annual) expressed in kwh

The value mentioned include:

E_{DC} : Power system, including UPS systems, switchgear, generators, power distribution units (PDUs), batteries, and distribution losses external to the IT equipment.
Cooling system, including heat rejection plant (air cooled chillers), pumps, fan wall units (FWU), computer room air handling units (CRAHs), air handling units (AHUs).
Others including data centre lighting, elevators, security systems, and fire alarm/detection systems.

E_{IT} : energy conumption due to IT equipment in data rooms, network rooms ecc

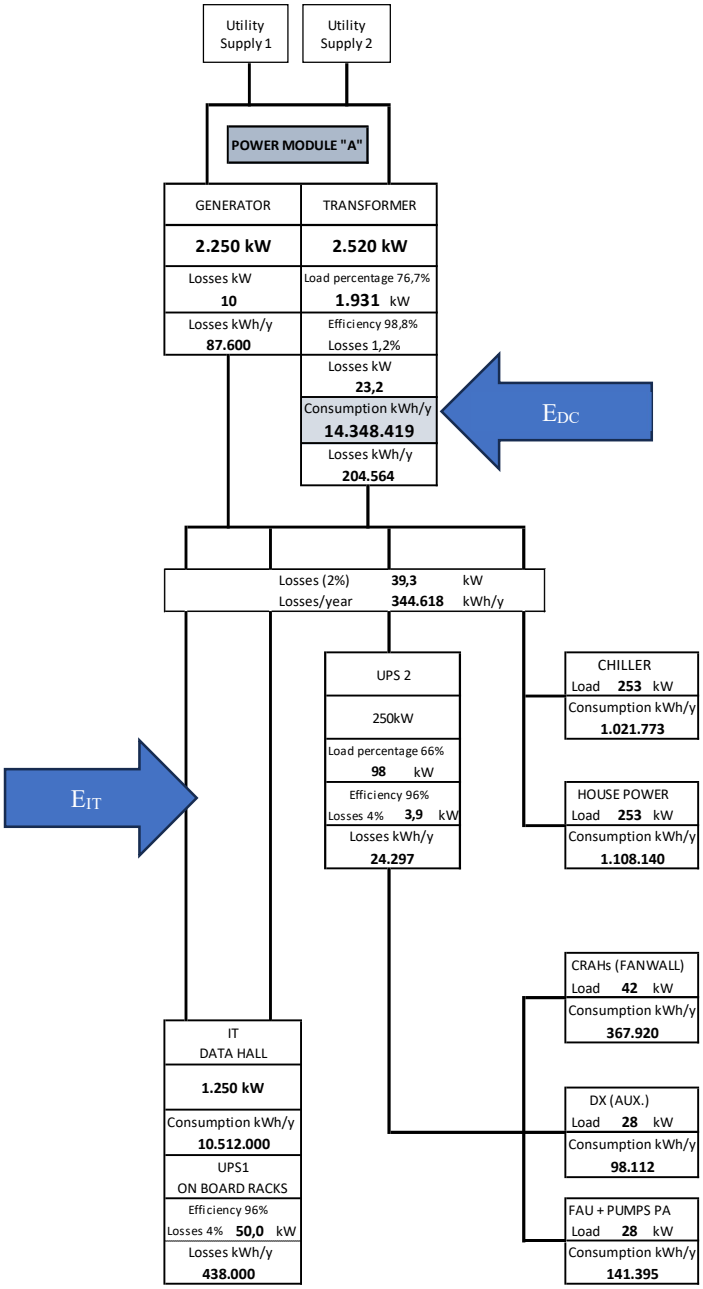

The schematics represent per each module how the value is acquired

DETAILED PUE ANALYSIS

Annual PUE contribution

100%		
Energy IT Consumptions:		
Data Halls:	kWh/y	43800000
Energy AUX Consumptions:		
Chillers:	kWh/y	5108865
FANWALL:	kWh/y	1752000
FAU+PA:	kWh/y	706975
DX-AUXs:	kWh/y	539700
House Power:	kWh/y	1095000
Others IT equipments:	kWh/y	350400
	kWh/y	9552941
Electrical Losses:		
UPS1 (on board racks)	kWh/y	1752000
UPS2	kWh/y	133964
Generators:	kWh/y	525600
Trafo:	kWh/y	754600
Network:	kWh/y	867350
Total losses	kWh/y	4082570
Consumption + losses	kWh/y	14467700
Grand total	kWh/y	56515700
	dPUE	1,290

25%		
Energy IT Consumptions:		
Data Halls:	kWh/y	10950000
Energy AUX Consumptions:		
Chillers:	kWh/y	1277216
FANWALL:	kWh/y	438000
FAU+PA:	kWh/y	176744
DX-AUXs:	kWh/y	134925
House Power:	kWh/y	1095000
Others IT equipments:	kWh/y	350400
	kWh/y	3472285
Electrical Losses:		
UPS1 (on board racks)	kWh/y	438000
UPS2	kWh/y	33491
Generators:	kWh/y	131400
Trafo:	kWh/y	216838
Network:	kWh/y	216838
Total losses	kWh/y	1036565
Consumption + losses	kWh/y	4508840
Grand total	kWh/y	15458840
	dPUE	1,412

50%		
Energy IT Consumptions:		
Data Halls:	kWh/y	21900000
Energy AUX Consumptions:		
Chillers:	kWh/y	2554433
FANWALL:	kWh/y	876000
FAU+PA:	kWh/y	353488
DX-AUXs:	kWh/y	269850
House Power:	kWh/y	1095000
Others IT equipments:	kWh/y	350400
	kWh/y	5499170
Electrical Losses:		
UPS1 (on board racks)	kWh/y	876000
UPS2	kWh/y	66982
Generators:	kWh/y	262800
Trafo:	kWh/y	433675
Network:	kWh/y	433675
Total losses	kWh/y	2073131
Consumption + losses	kWh/y	7572292
Grand total	kWh/y	29472292
	dPUE	1,346

75%		
Energy IT Consumptions:		
Data Halls:	kWh/y	32850000
Energy AUX Consumptions:		
Chillers:	kWh/y	3831649
FANWALL:	kWh/y	1314000
FAU+PA:	kWh/y	530231,5
DX-AUXs:	kWh/y	404775,1
House Power:	kWh/y	1095000
Others IT equipments:	kWh/y	350400
	kWh/y	7526056
Electrical Losses:		
UPS1 (on board racks)	kWh/y	1314000
UPS2	kWh/y	100472,9
Generators:	kWh/y	394200
Trafo:	kWh/y	650512,7
Network:	kWh/y	650512,7
Total losses	kWh/y	3109697
Consumption + losses	kWh/y	10635743
Grand total	kWh/y	43485743
	dPUE	1,324

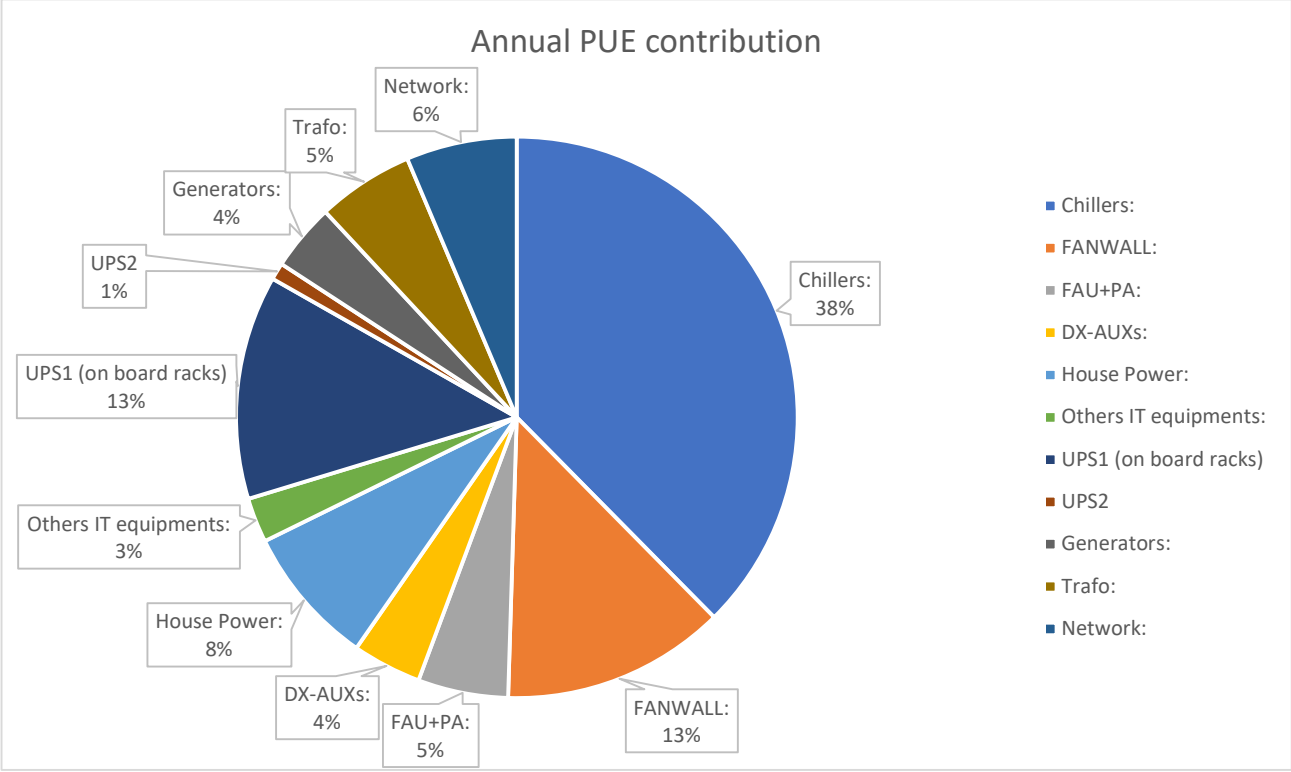

ANNUAL HOURLY DATA ON HEAT REJECTION PLANT

The table below shows the energy demand of the heat rejection plant with hourly data across the year for the building under exam

T Air	N°HOURS	Nominal IT LOAD	Unitary chiller power	Unitary compressor power	Unitary Free Cooling power
°C	h	kWt	kWf	kWf	kWf
-6/-10	5	5000	1030		1030
-5	3	5000	1035		1035
-4	8	5000	1036		1036
-3	23	5000	1037		1037
-2	51	5000	1038		1038
-1	69	5000	1039		1039
0	131	5000	1040		1040
1	165	5000	1041		1041
2	173	5000	1042		1042
3	211	5000	1043		1043
4	207	5000	1044		1044

5	239	5000	1045		1045
6	304	5000	1046		1046
7	335	5000	1047		1047
8	357	5000	1048	73	975
9	396	5000	1049	147	902
10	395	5000	1050	221	830
11	409	5000	1051	294	757
12	348	5000	1052	368	684
13	300	5000	1053	442	611
14	327	5000	1054	516	538
15	397	5000	1055	591	464
16	407	5000	1056	665	391
17	331	5000	1057	740	317
18	308	5000	1058	815	243
19	327	5000	1059	890	169
20	306	5000	1060	965	95
21	285	5000	1059	1059	
22	291	5000	1058	1058	
23	269	5000	1057	1057	
24	264	5000	1056	1056	
25	214	5000	1055	1055	
26	220	5000	1054	1054	
27	188	5000	1053	1053	
28	157	5000	1052	1052	
29	126	5000	1051	1051	
30	80	5000	1052	1052	
31	56	5000	1053	1053	
32	30	5000	1054	1054	
33	20	5000	1055	1055	
34	13	5000	1056	1056	
35	6	5000	1057	1057	
36	4	5000	1058	1058	
(37/40)	5	5000	1062	1062	

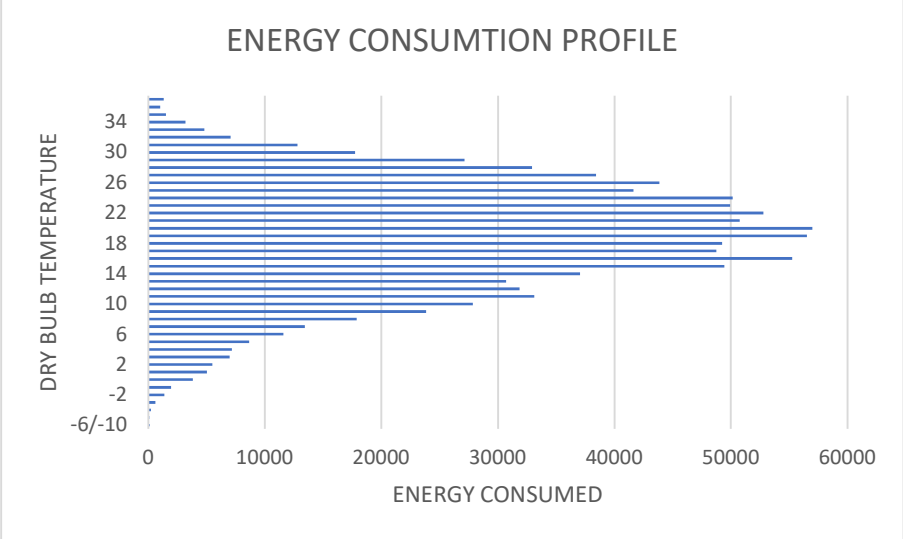
ENERGY CONSUMTION PROFILE
DRY BULB TEMPERATURE
34
30
26
22
18
14
10
6
2
-2
-6/-10
0
10000
20000
30000
40000
50000
60000
ENERGY CONSUMED

DETAILED PUE PEAK CALCULAITON

The peak designed PUE calculation has been carried out based on external ambient temperature of 40°C DB, 29,8°C WB. This calculation is based on the assumption of no system failure and no planned maintenance, at 100% IT load.

Outdoor Air DB [°C]	BIN HOURS	Cumul. HOURS	IT LOAD kW	UPS1 energy consump. [kWh]	Others IT energy consumption [kWh]	Total Chillers energy consumption [kWh]	Total FANWALL energy consumption [kWh]	Total FAU+PA energy consumption [kWh]	Total DX-AUXs energy consumption [kWh]	Total HOUSE-POWER energy consumption [kWh]	UPS energy consumption [kWh]	GENERATORS energy consumption [kWh]	MT/BT Trafo energy consumption [kWh]	Networks energy consumption [kWh]	Eit [kWh]	Eaux [kWh]	Edc (Eit+Eaux) [kWh]	**dPUE** = Edc/Eit [kWh/kWh]
(37/40)	5	8760	5.000	1.000	200	6.652	1.000	950	378	688	101	300	491	565	25.000	12.805	36.805	1,534

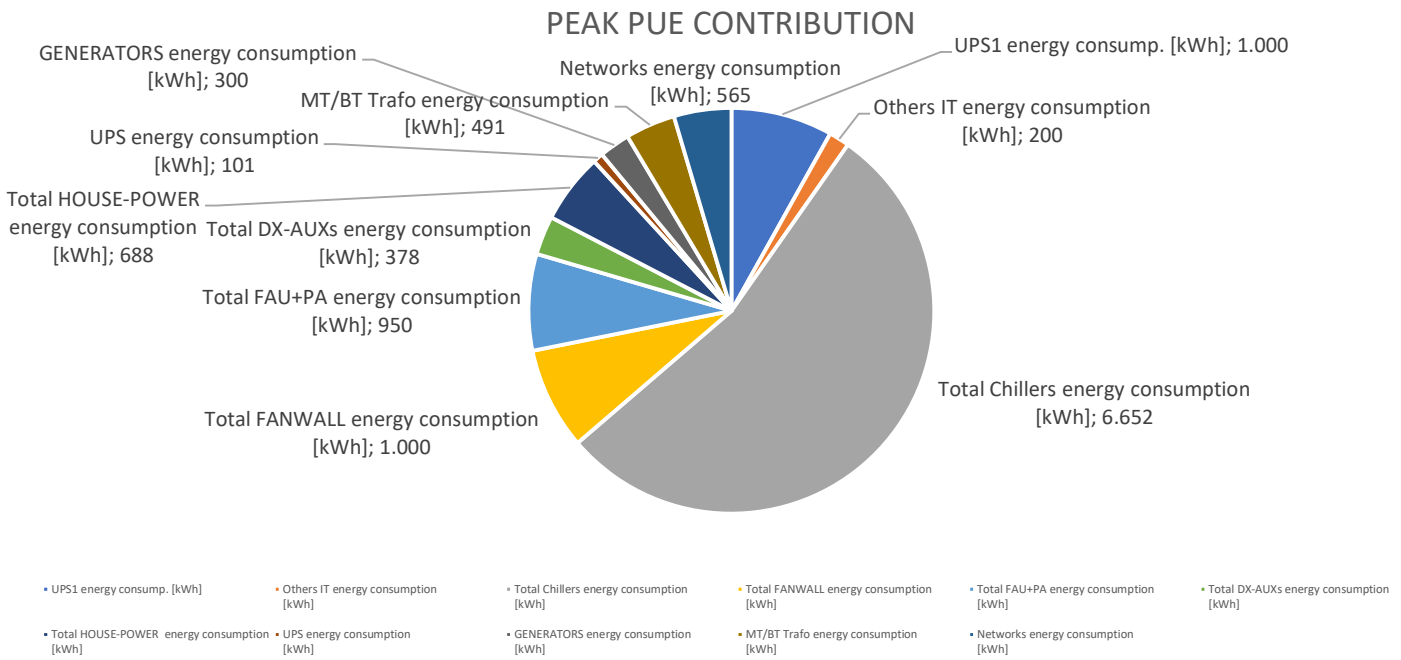
PEAK PUE CONTRIBUTION
GENERATORS energy consumption [kWh]; 300
MT/BT Trafo energy consumption [kWh]; 491
Networks energy consumption [kWh]; 565
UPS1 energy consump. [kWh]; 1.000
Others IT energy consumption [kWh]; 200
UPS energy consumption [kWh]; 101
Total HOUSE-POWER energy consumption [kWh]; 688
Total DX-AUXs energy consumption [kWh]; 378
Total FAU+PA energy consumption [kWh]; 950
Total FANWALL energy consumption [kWh]; 1.000
Total Chillers energy consumption [kWh]; 6.652
UPS1 energy consump. [kWh]
Others IT energy consumption [kWh]
Total Chillers energy consumption [kWh]
Total FANWALL energy consumption [kWh]
Total FAU+PA energy consumption [kWh]
Total DX-AUXs energy consumption [kWh]
Total HOUSE-POWER energy consumption [kWh]
UPS energy consumption [kWh]
GENERATORS energy consumption [kWh]
MT/BT Trafo energy consumption [kWh]
Networks energy consumption [kWh]

PHOTOVOLTAIC GAIN

The design provided for the building includ a photovoltaic field to be installed on the hirgher roof of the building.
All the power produced will be used by the building.

The total amount of photovoltaic surface reach approximately 890 sqm.

The estimated peak power generation from the Pv field is aproximately 193kW, regarding positiong and orientation the total energy provided by the system will be:

MONTLY SUMMARIZE OF PV ENERGY PRODUCTION											
JAN	FEB	MAR	APR	MAY	JUN	JUL	AUG	SEP	OCT	NOV	DIC
6656,19	9216,68	16817,36	20661,59	24391,79	26308,75	27875,54	23844,41	18047,35	11526,37	6403,56	5161,99

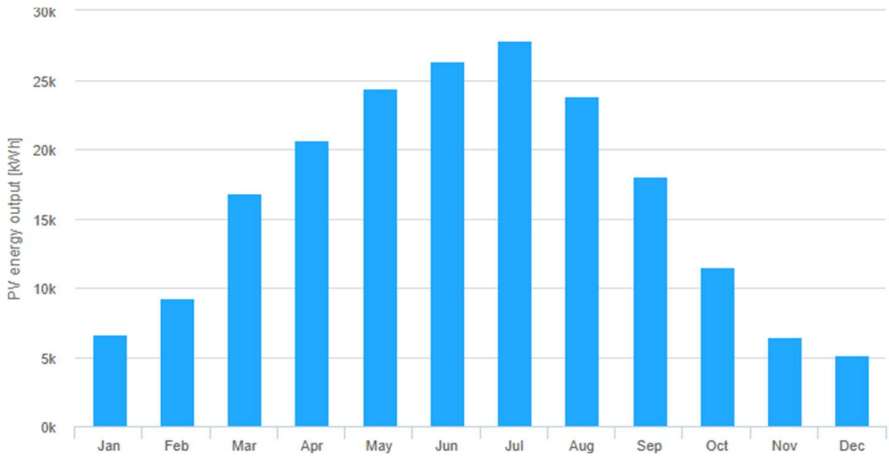

Considering the theoretical gain of the PV field the dPUE can change as shown below

CONDITION	100%IT		25%IT		50%IT		75%IT
dPUE without PV	1,290		1,412		1,346		1,324
Improved annualized dPUE	1,286		1,394		1,337		1,318

CONCLUSION

The PUE analysis conducted shows that the annualized dPUE at 100% IT load utilization is 1.252 based on ASHRAE weather data.
The peak dPUE at 100% IT load is 1.53.
However, it should be noted that under normal operation, data center rarely reaches a constant 100% IT utilization for the entire year. Based on past operational experience, STACK has never seen operating power levels exceed 80% and generally operate between 50% to 75% IT utilization. Therefore, it is expected that the dPUE would be approximately 1.31 in reality.

CONDITION	100%IT		25%IT		50%IT		75%IT
Peak dPUE	1,534		-		-		-
dPUE without PV	1,290		1,412		1,346		1,324
Improved annualised dPUE	1,286		1,394		1,337		1,318

APPENDIX A ASHRAE WEATHER DATA

2021 ASHRAE Handbook - Foundamentals (SI)

MILANO LINATE, ITALY (WMO: 160800)

Lat:45.445N Long:9.277E Elev:108 StdP: 100.04 Time zone:1.00 (EUC) Period:94-19 WBAN:99999

Annual Heating, Humidification, and Ventilation Design Conditions

Coldest Month	Heating DB		Humidification DP/MCDB and HR						Coldest month WS/MCDB				MCWS/PCWD to 99.6% DB		WSF
			99.6%			99%			0.4%		1%				
	99.6%	99%	DP	HR	MCDB	DP	HR	MCDB	WS	MCDB	WS	MCDB	MCWS	PCWD	
1	-4.0	-2.7	-11.1	1.5	4.2	-8.6	1.8	3.2	9.0	9.0	7.5	8.9	0.9	190	0.385

Annual Cooling, Dehumidification, and Enthalpy Design Conditions

Hottest Month	Hottest Month DB Range	Cooling DB/MCWB						Evaporation WB/MCDB						MCWS/PCWD to 0.4% DB	
		0.4%		1%		2%		0.4%		1%		2%			
		DB	MCWB	DB	MCWB	DB	MCWB	WB	MCDB	WB	MCDB	WB	MCDB	MCWS	PCWD
7	10.5	33.7	23.8	32.2	22.9	31.0	22.3	25.2	31.2	24.2	30.0	23.3	29.0	2.3	230

Dehumidification DP/MCDB and HR									Enthalpy/MCDB						Extreme Max WB
0.4%			1%			2%			0.4%		1%		2%		
DP	HR	MCDB	DP	HR	MCDB	DP	HR	MCDB	Enth	MCDB	Enth	MCDB	Enth	MCDB	
23.3	18.4	28.5	22.3	17.2	27.4	21.4	16.3	26.6	77.5	31.2	73.3	29.9	69.9	28.9	29.0

Extreme Annual Design Conditions

Extreme Annual WS				Extreme Annual Temperature				n-Year Return Period Values of Extreme Temperature							
				Mean		Standard deviation		n=5 years		n=10 years		n=20 years		n=50 years	
1%	2.5%	5%		Min	Max	Min	Max	Min	Max	Min	Max	Min	Max	Min	Max
6.8	5.4	4.4	DB	-6.4	35.5	2.0	1.3	-7.8	36.5	-9.0	37.2	-10.1	37.9	-11.5	38.8
			WB	-7.0	26.1	2.0	1.4	-8.5	27.1	-9.6	28.0	-10.8	28.7	-12.2	29.8

Monthly Climatic Design Conditions

		Annual	Jan	Feb	Mar	Apr	May	Jun	Jul	Aug	Sep	Oct	Nov	Dec
Temperatures, Degree-Days and Degree-Hours	DBAvg	14.5	3.7	5.6	10.2	14.1	18.8	23.1	25.2	24.6	20.1	14.9	9.0	4.3
	DBStd	8.14	2.64	3.09	3.27	3.04	3.07	3.10	2.31	2.60	2.82	3.15	3.25	2.99
	HDD10.0	598	195	125	37	4	0	0	0	0	0	3	56	178
	HDD18.3	2068	453	356	252	131	32	3	0	0	14	112	281	436
	CDD10.0	2249	1	2	44	126	273	393	472	453	304	156	25	1
	CDD18.3	677	0	0	0	3	46	146	213	194	68	7	0	0
	CDH23.3	6120	0	0	4	31	359	1336	2133	1801	433	22	0	0
	CDH26.7	2248	0	0	0	3	84	489	859	713	97	2	0	0
Wind	WSAvg	1.6	1.4	1.5	1.9	2.0	2.0	1.9	1.8	1.5	1.4	1.2	1.3	1.2
Precipitation	PrecAvg	971	75	66	82	79	93	71	60	84	72	105	98	60
	PrecMax	1413	275	151	202	244	289	153	203	178	214	417	265	156
	PrecMin	659	1	1	5	6	4	22	14	1	3	3	1	0
	PrecStd	225	65	45	54	55	70	34	49	56	58	93	64	35
Monthly Design Dry Bulb and Mean Coincident Wet Bulb Temperatures	0.4% DB		14.5	18.0	23.2	26.2	31.4	34.7	34.8	35.8	31.0	25.8	18.8	13.8
	0.4% MCWB		8.2	10.9	13.2	16.4	20.9	24.6	23.5	25.2	21.3	18.3	15.0	8.8
	2% DB		11.2	14.9	20.3	24.0	29.0	32.9	33.2	33.7	29.1	23.3	16.2	11.2
	2% MCWB		7.1	9.2	12.5	15.5	19.4	23.3	23.6	23.8	20.6	17.8	12.9	8.8
	5% DB		9.2	12.8	18.6	22.2	27.0	31.1	32.1	32.0	27.8	21.9	14.9	10.0
	5% MCWB		6.4	7.9	11.9	14.4	18.5	22.3	23.2	22.9	20.0	16.8	12.4	8.1
	10% DB		8.0	10.9	16.7	20.4	25.1	29.7	31.0	30.5	25.9	20.1	13.7	8.9
	10% MCWB		5.9	7.1	11.0	13.7	17.6	21.4	22.4	22.2	18.8	16.2	11.9	7.4
Monthly Design Wet Bulb and Mean Coincident Dry Bulb Temperatures	0.4% WB		10.1	11.5	15.1	17.6	21.7	26.2	26.4	27.0	23.2	19.8	15.6	11.2
	0.4% MCDB		12.4	16.6	20.1	23.9	29.7	33.3	32.3	33.9	28.6	22.6	17.0	12.3
	2% WB		8.2	9.9	13.6	16.1	20.3	24.5	25.1	25.2	22.1	19.0	14.1	9.7
	2% MCDB		9.6	13.3	18.1	22.3	27.0	30.5	31.0	31.1	26.8	21.8	15.3	10.5
	5% WB		7.1	8.7	12.5	15.2	19.3	23.3	24.1	24.1	21.0	18.1	13.1	8.5
	5% MCDB		8.4	11.3	17.0	20.8	25.4	29.1	30.0	29.6	25.4	20.9	14.3	9.4
	10% WB		6.1	7.7	11.5	14.3	18.3	22.3	23.3	23.1	20.0	17.0	12.1	7.4
	10% MCDB		7.5	9.7	15.7	19.1	23.9	27.8	29.2	28.5	24.1	19.3	13.4	8.3
Mean Daily Temperature Range		MDBR	7.0	8.5	10.2	9.8	10.0	10.2	10.5	10.3	9.8	7.9	6.4	6.2
	5% DB	MCDBR	9.8	12.9	14.0	13.1	13.0	11.9	11.4	11.9	11.8	10.6	8.5	8.2
		MCWBR	6.5	8.0	7.3	6.0	5.6	5.4	4.9	4.8	4.8	5.7	5.5	5.8
	5% WB	MCDBR	7.8	10.8	11.8	11.4	11.5	11.1	10.5	11.1	10.2	8.8	6.4	5.8
		MCWBR	5.7	7.1	6.6	5.7	5.6	5.6	5.0	5.1	4.8	5.7	5.5	5.8
Clear Sky Solar Irradiance	taub		0.349	0.377	0.423	0.465	0.462	0.484	0.465	0.456	0.450	0.433	0.378	0.343
	taud		2.379	2.270	2.147	2.062	2.124	2.108	2.168	2.197	2.184	2.187	2.309	2.402
	Ebn at noon		743	785	795	795	812	794	805	795	761	707	692	708
	Edn at noon		77	102	132	156	151	155	144	135	126	110	82	68
All-Sky Solar Radiation	RadAvg		1.45	2.24	3.57	4.51	5.58	6.43	6.56	5.55	4.15	2.43	1.44	1.21
	RadStd		0.21	0.33	0.46	0.50	0.45	0.37	0.40	0.34	0.28	0.38	0.25	0.17

Historical Trends

	DBAvg	Heating		Cooling			Degree-Days			
		99% DB	99% DP	1% DB	1% WB	1% DP	HDD10.0	HDD18.3	CDD10.0	CDD18.3
Station Only	N/A	N/A	N/A	N/A	-1.14	-1.61	N/A	N/A	N/A	N/A
Regional (0 neighbors)	+0.35	N/A	N/A	+0.66	+0.38	+0.29	N/A	N/A	+61	+10

APPENDIX B MECHANICAL SCHEMATICS

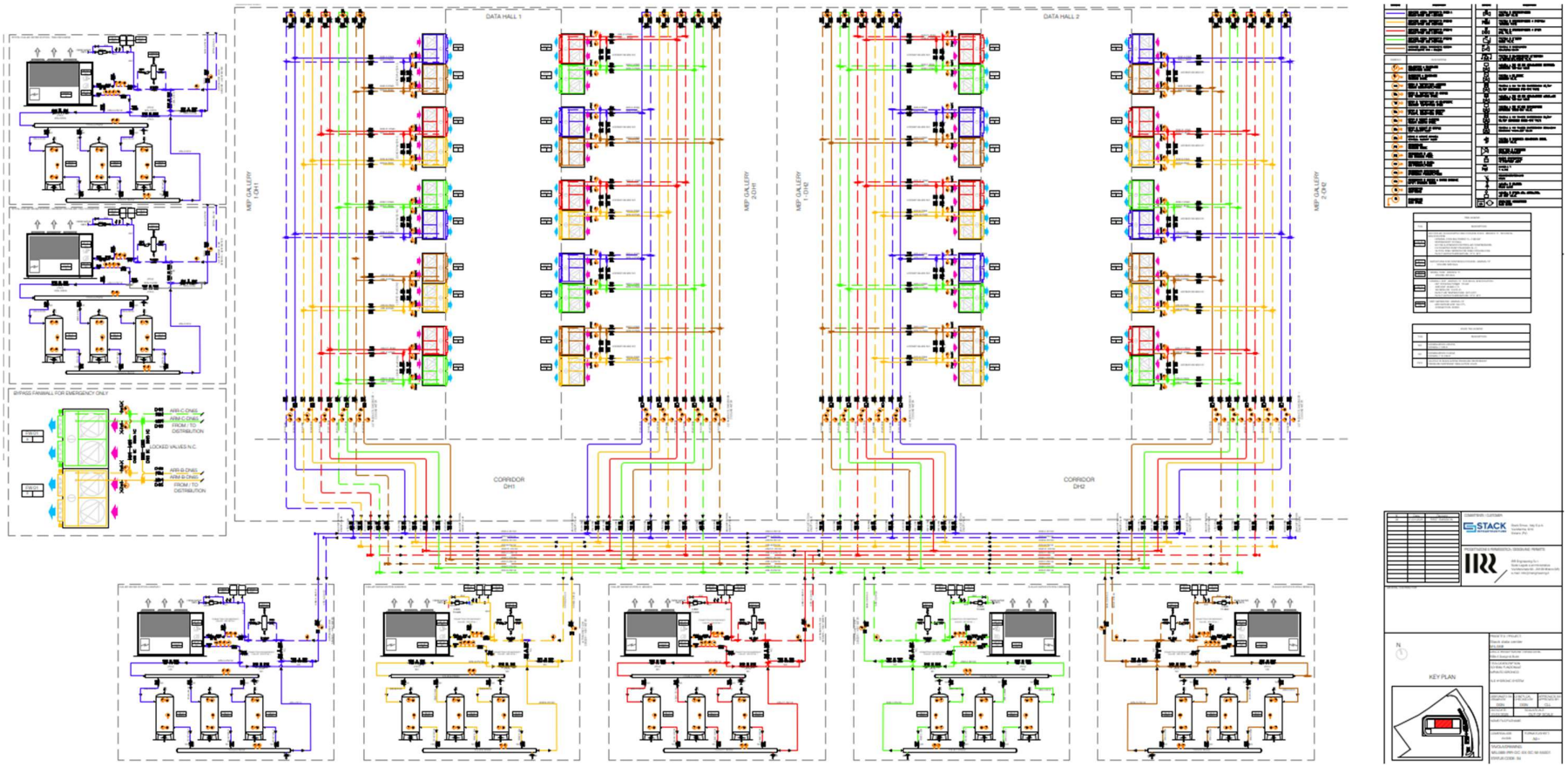
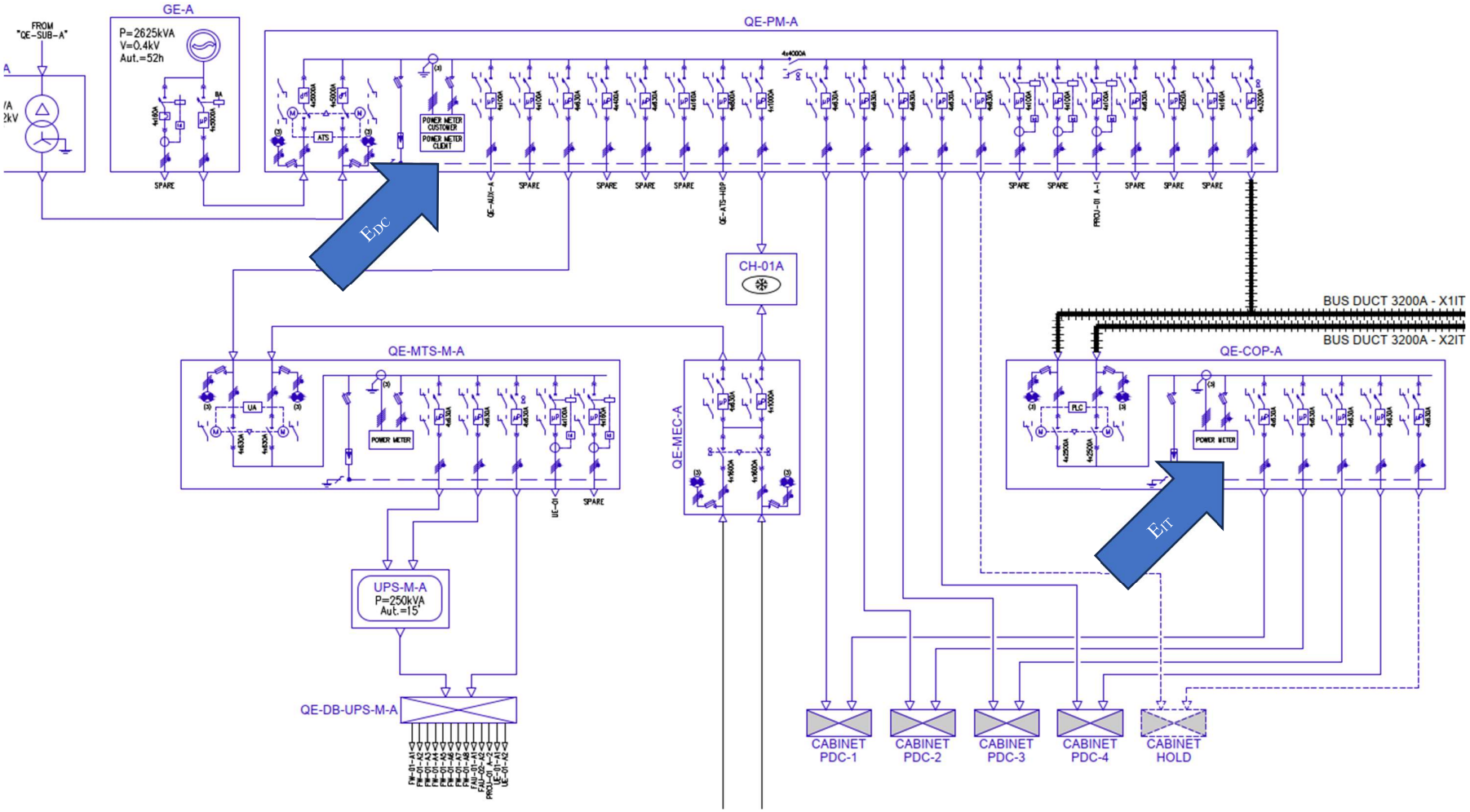
APPENDIX C TYPICAL METERING SCHEMATICS